STANDARD No. 3-A COMBINATION INLET-MANHOLE

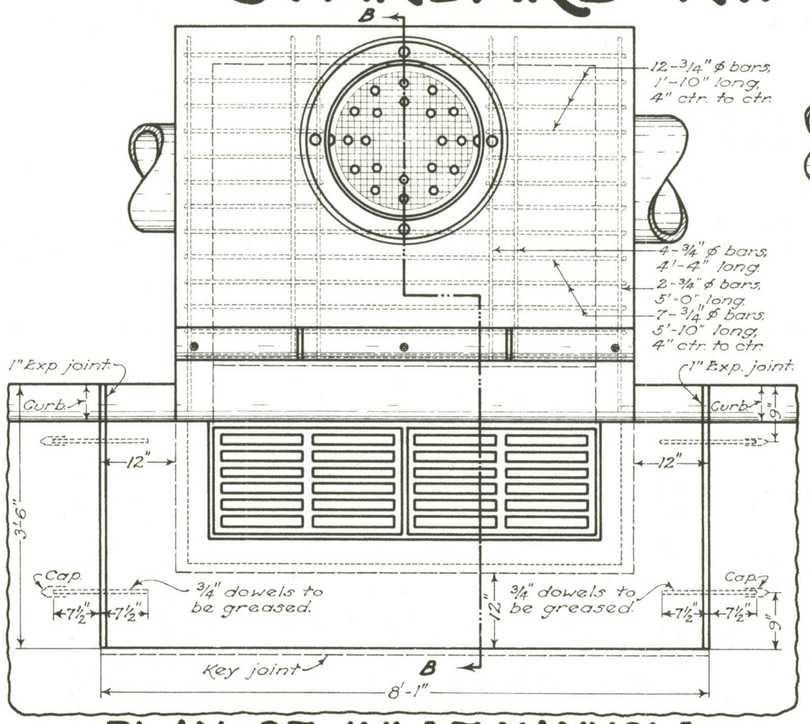

PLAN OF INLET-MANHOLE AND PAVEMENT JOINTS

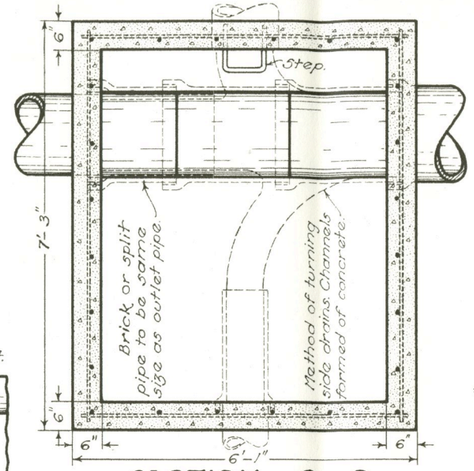

SECTION C-C

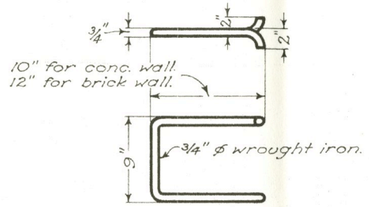

STEP

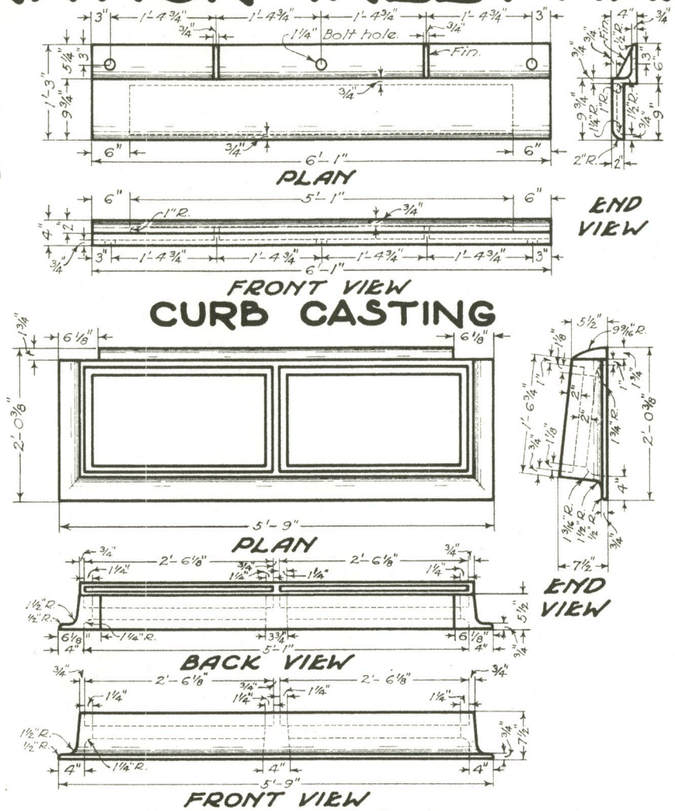

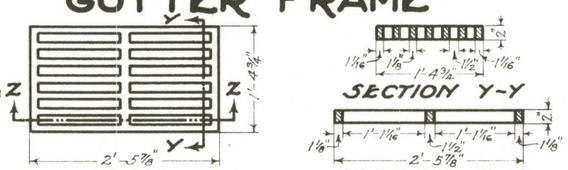

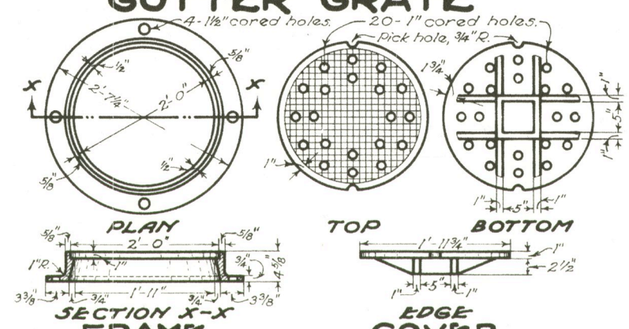

NOTES

CASTINGS shall be of cast iron in accordance with Material Details. The designs shall be essentially the same and equally as strong as those shown hereon, and shall be given one coat of asphaltum paint as per specifications.

REINFORCING steel in walls shall be ½" round bars at 12" centers and vertical in each corner. Top to be reinforced as shown hereon.

CONCRETE shall be Class "C".

BRICK side walls, when used in place of reinforced concrete, shall be 8" in thickness, laid in Portland cement mortar, every sixth course to be a stretcher course, and to be plastered on the inside and outside with 1-2 cement mortar ½" thick.

BOTTOM of manhole shall be Class "C" concrete.

Channel sections in the manhole shall be constructed of split pipe or brick except curved sections which may be built by forming a channel in the concrete.

STEPS shall be of good quality wrought iron in accordance with Material Details, free from cracks and shall be given one coat of asphaltum paint as per specifications.

PAVEMENT:— The 8'-1" x 3'-6" portion blocked out of the pavement shall be placed after the casting has been set but shall be paid for as part of the pavement.

INLET CASTINGS

WEIGHTS approximately:—

Curb casting	320 lbs.
Gutter frame	650 lbs.
Two grates	280 lbs.

BEARING AREAS of frame and grate shall be so fitted and finished as to provide a firm and even seat for all portions of the grate in the frame. No projections shall exist on bearing areas of either casting, and each grate shall seat in its frame without rocking. Frames and grates shall be fitted, matched and marked before delivery to the project.

MANHOLE CASTINGS

WEIGHT approximately:—

Frame and cover	250 lbs.

SETTING OF CASTING:— The base of the frame shall be set in a full bed of Portland cement mortar, and so adjusted as to conform to the finished grade and slope of the adjacent surface.

NOTE:— When the portion of the manhole above the top slab is not placed integral with the slab it shall be tied to the slab with ½" x 12" deformed bars at 12" spacing.

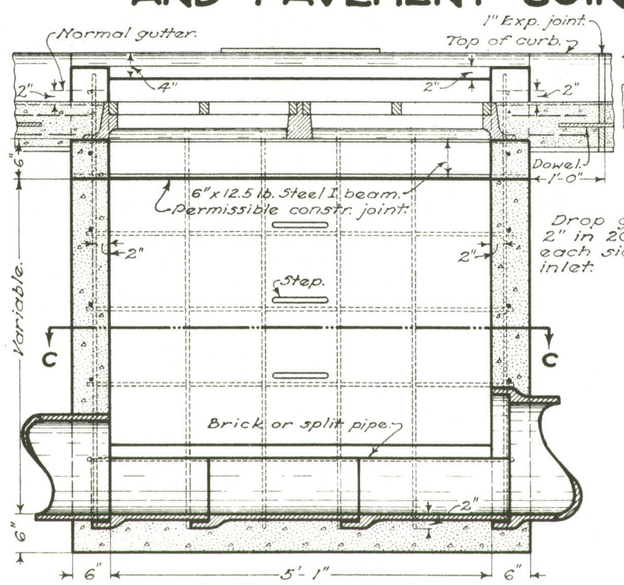

SECTION A-A

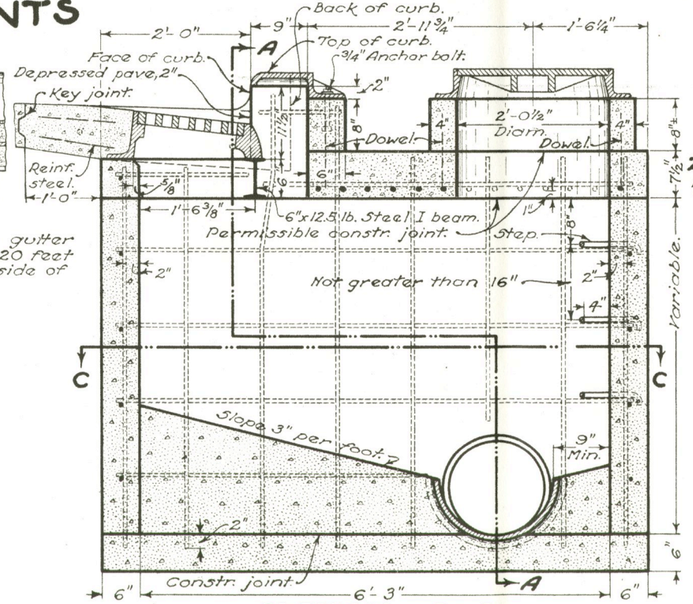

SECTION B-B

INLET-MANHOLE

BUREAU OF LOCATION AND DESIGN
OHIO DEPARTMENT OF HIGHWAYS

INLET-MANHOLE

DATE 7-1-47

STANDARD CONSTRUCTION DRAWING

I-8 M.H. No. 3-A

APPROVED _____ CHIEF ENGINEER.

STANDARD No. 3-A COMBINATION INLET-MANHOLE

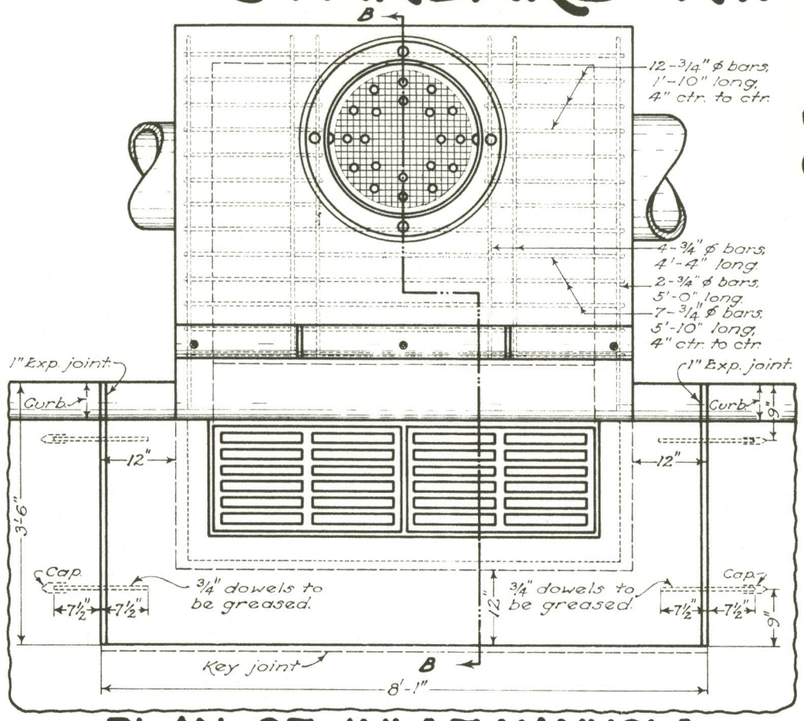

PLAN OF INLET-MANHOLE AND PAVEMENT JOINTS

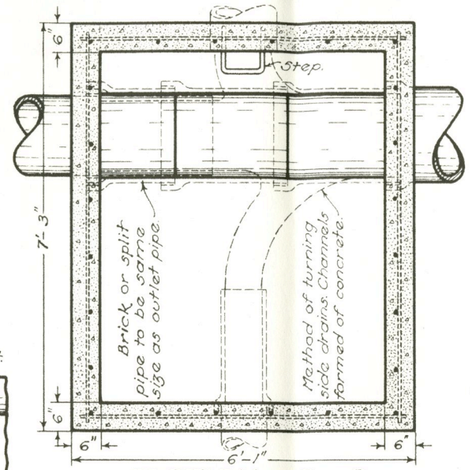

SECTION C-C

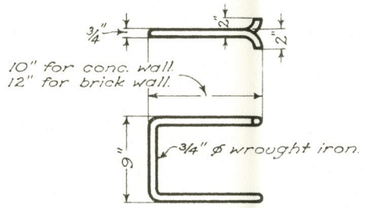

STEP

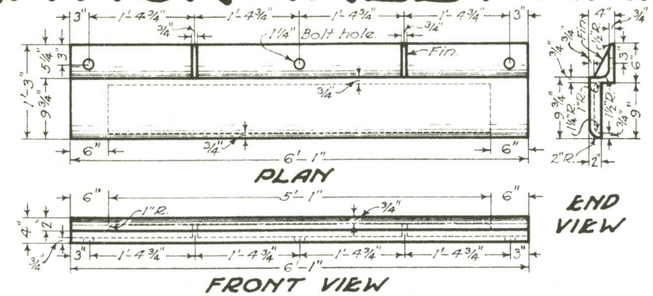

CURB CASTING

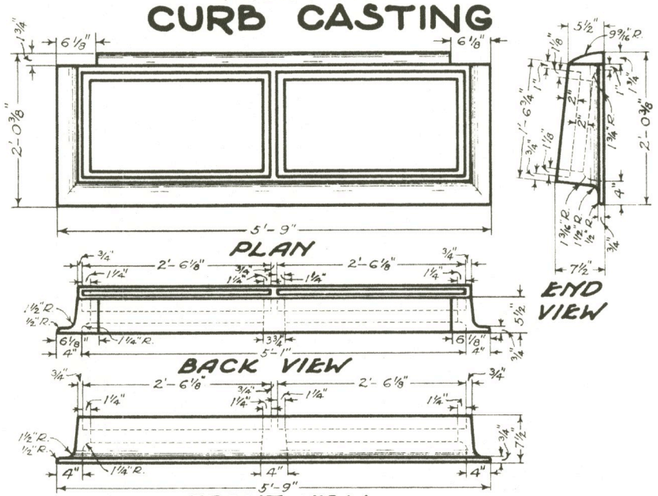

GUTTER FRAME

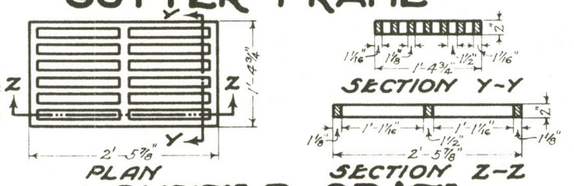

GUTTER GRATE

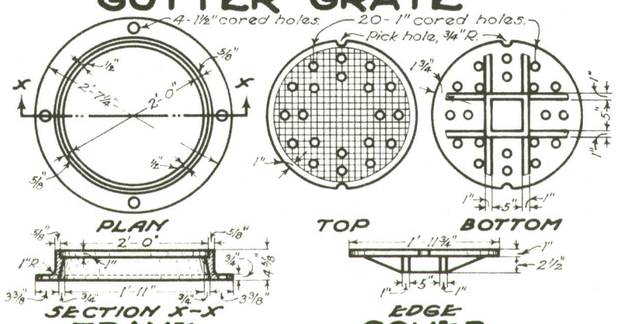

FRAME COVER

MANHOLE CASTINGS

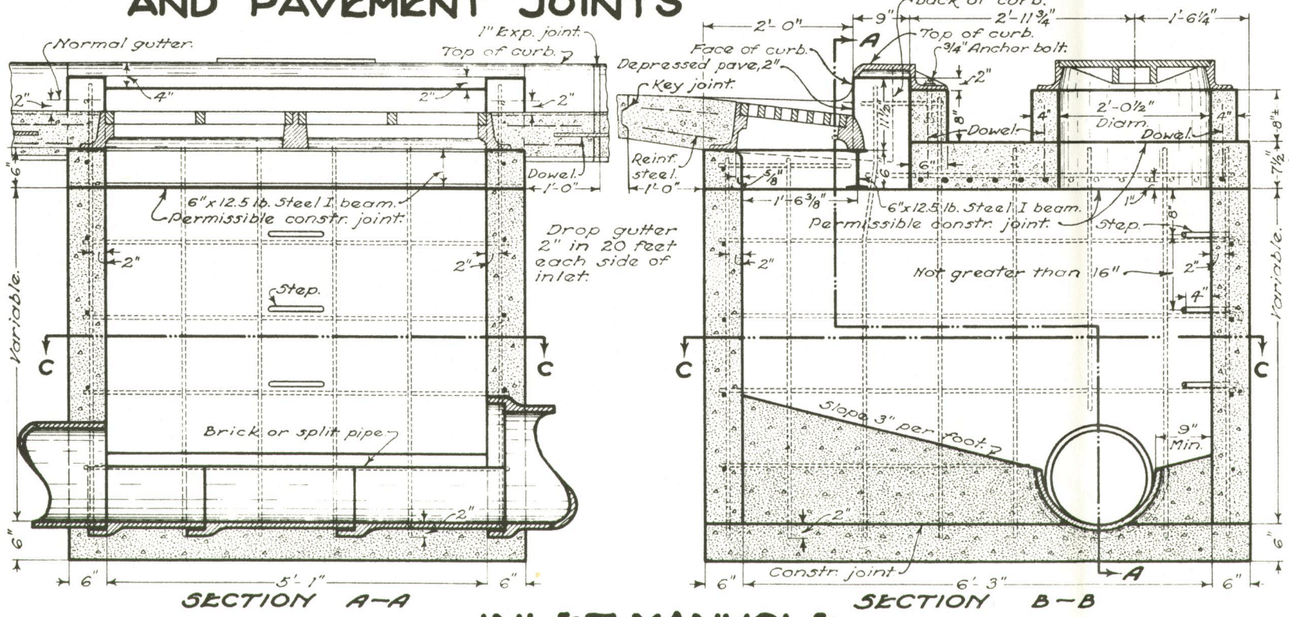

INLET-MANHOLE

NOTES

CASTINGS shall be of cast iron in accordance with Material Details. The designs shall be essentially the same and equally as strong as those shown hereon, and shall be given one coat of asphaltum paint as per specifications.

REINFORCING steel in walls shall be ½" round bars at 12" centers and vertical in each corner. Top to be reinforced as shown hereon.

CONCRETE shall be Class "C".

BRICK side walls, when used in place of reinforced concrete, shall be 8" in thickness, laid in Portland cement mortar, every sixth course to be a stretcher course.

BOTTOM of manhole shall be Class "C" concrete.

Channel sections in the manhole shall be constructed of split pipe or brick except curved sections which may be built by forming a channel in the concrete.

STEPS shall be of good quality wrought iron in accordance with Material Details, free from cracks and shall be given one coat of asphaltum paint as per specifications.

PAVEMENT:— The 8'-1" x 3'-6" portion blocked out of the pavement shall be placed after the casting has been set but shall be paid for as part of the pavement.

INLET CASTINGS

WEIGHTS approximately:—

Curb casting	320 lbs.
Gutter frame	650 lbs.
Two grates	280 lbs.

BEARING AREAS of frame and grate shall be so fitted and finished as to provide a firm and even seat for all portions of the grate in the frame. No projections shall exist on bearing areas of either casting, and each grate shall seat in its frame without rocking. Frames and grates shall be fitted, matched and marked before delivery to the project.

MANHOLE CASTINGS

WEIGHT approximately:—

Frame and cover	250 lbs.

SETTING OF CASTING:— The base of the frame shall be set in a full bed of Portland cement mortar, and so adjusted as to conform to the finished grade and slope of the adjacent surface.

NOTE:— When the portion of the manhole above the top slab is not placed integral with the slab it shall be tied to the slab with ½" x 12" deformed bars at 12" spacing.

BUREAU OF LOCATION AND DESIGN
OHIO DEPARTMENT OF HIGHWAYS

INLET-MANHOLE

DATE 7-1-47 1-2-'51

STANDARD CONSTRUCTION DRAWING I-8 M.H. No. 3-A

APPROVED K.L.R. CHIEF ENGINEER

STANDARD No. 3-A COMBINATION INLET-MANHOLE

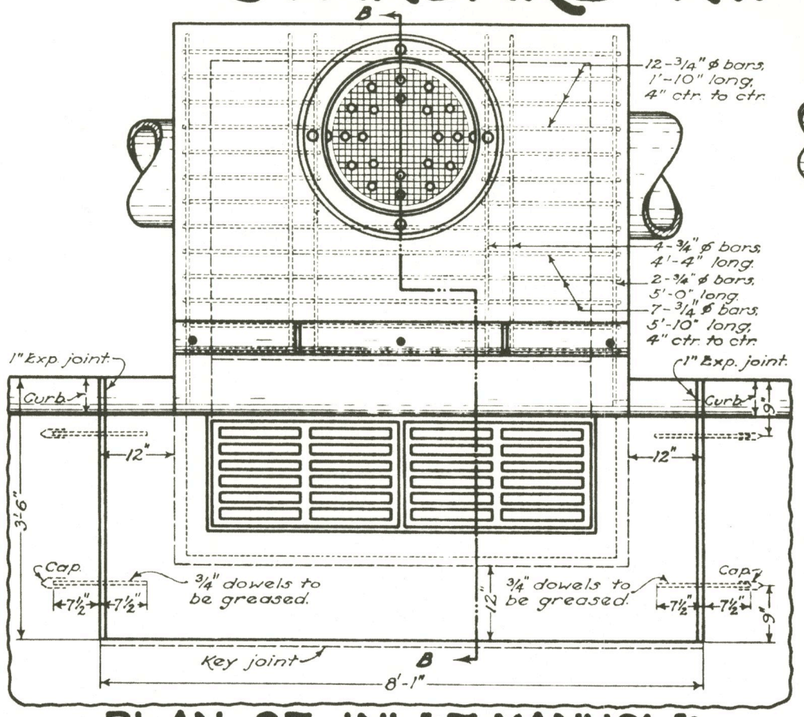

PLAN OF INLET-MANHOLE AND PAVEMENT JOINTS

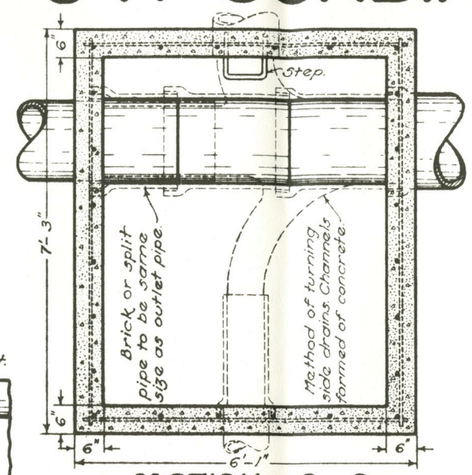

SECTION C-C

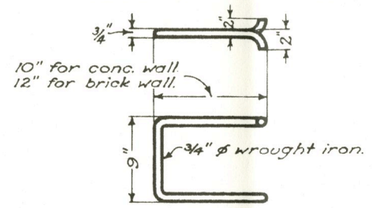

STEP

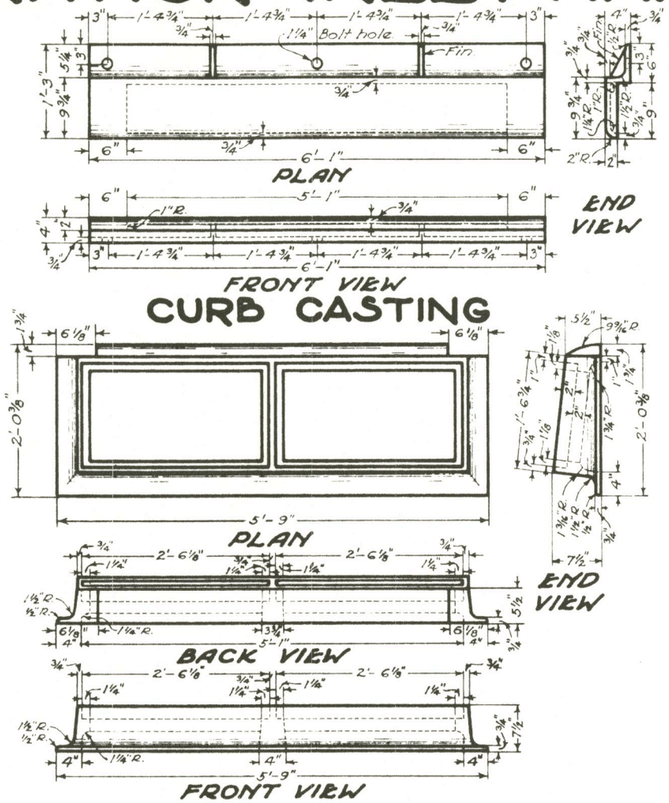

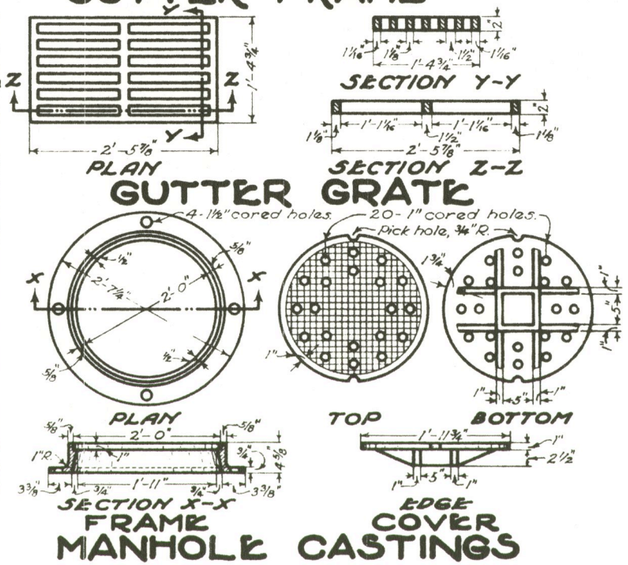

NOTES

CASTINGS shall be of cast iron in accordance with Material Details. The designs shall be essentially the same and equally as strong as those shown hereon, and shall be given one coat of asphaltum paint as per specifications.

REINFORCING steel in walls shall be ½" round bars at 12" centers and vertical in each corner. Top to be reinforced as shown hereon.

CONCRETE shall be Class "C".

BRICK side walls, when used in place of reinforced concrete, shall be 8" in thickness, laid in Portland cement mortar, every sixth course to be a stretcher course.

BOTTOM of manhole shall be Class "C" concrete.

Channel sections in the manhole shall be constructed of split pipe or brick except curved sections which may be built by forming a channel in the concrete.

STEPS shall be of good quality wrought iron in accordance with Material Details, free from cracks and shall be given one coat of asphaltum paint as per specifications.

PAVEMENT:— The 8'-1" x 3'-6" portion blocked out of the pavement shall be placed after the casting has been set but shall be paid for as part of the pavement.

INLET CASTINGS

WEIGHTS approximately:—

Curb casting	320 lbs.
Gutter frame	650 lbs.
Two grates	270 lbs.

BEARING AREAS of frame and grate shall be so fitted and finished as to provide a firm and even seat for all portions of the grate in the frame. No projections shall exist on bearing areas of either casting, and each grate shall seat in its frame without rocking. Frames and grates shall be fitted, matched and marked before delivery to the project.

MANHOLE CASTINGS

WEIGHT approximately:—

Frame and cover	250 lbs.

SETTING OF CASTING:— The base of the frame shall be set in a full bed of Portland cement mortar, and so adjusted as to conform to the finished grade and slope of the adjacent surface.

NOTE:— When the portion of the manhole above the top slab is not placed integral with the slab it shall be tied to the slab with ½" x 12" deformed bars at 12" spacing.

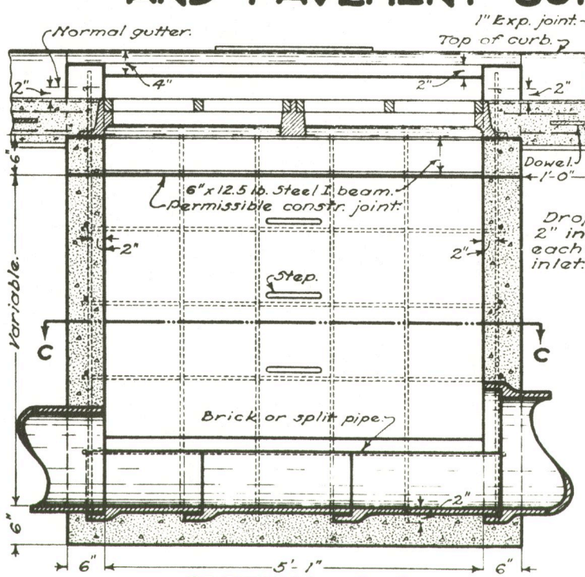

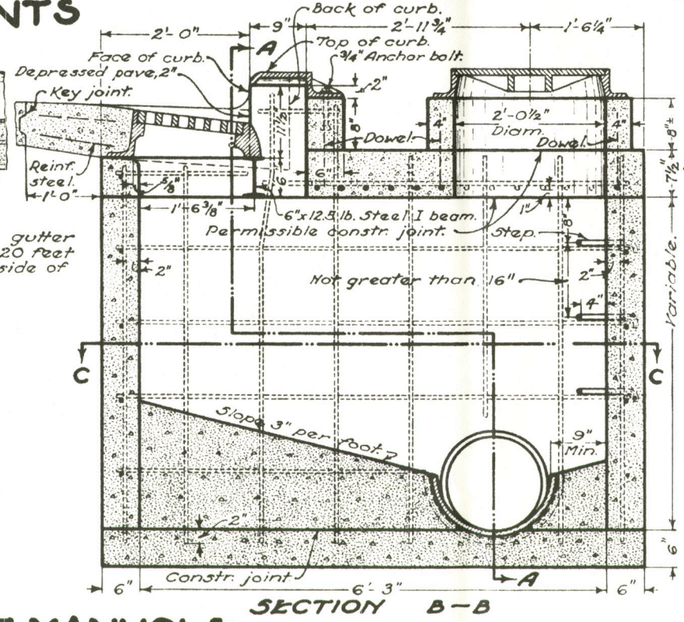

INLET-MANHOLE

BUREAU OF LOCATION AND DESIGN
OHIO DEPARTMENT OF HIGHWAYS

INLET-MANHOLE

DATE 7-1-47 1-2-51 5-15-51

STANDARD CONSTRUCTION DRAWING I-8 M.H. No. 3-A

APPROVED K.L.R. CHIEF ENGINEER.

STANDARD No. 3-A COMBINATION INLET-MANHOLE

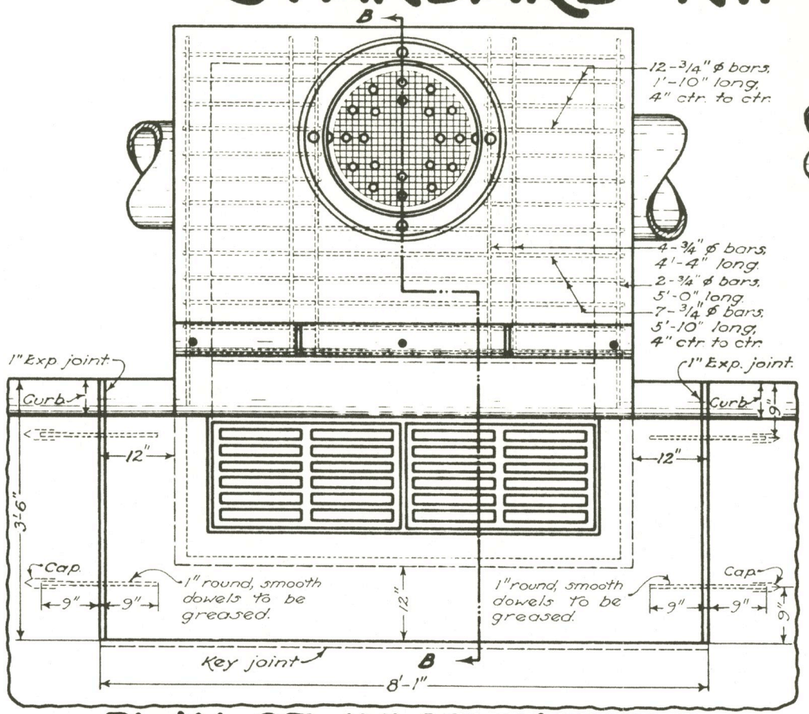

PLAN OF INLET-MANHOLE AND PAVEMENT JOINTS

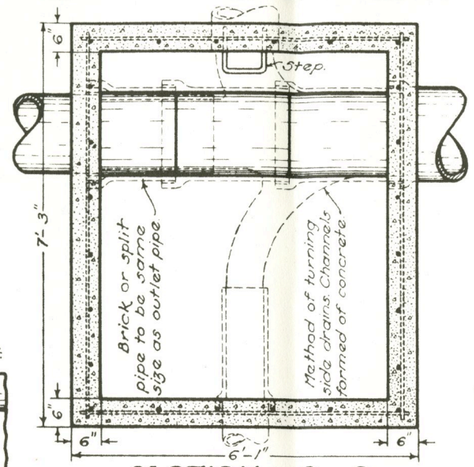

SECTION C-C

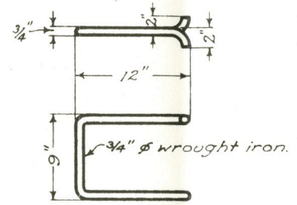

STEP

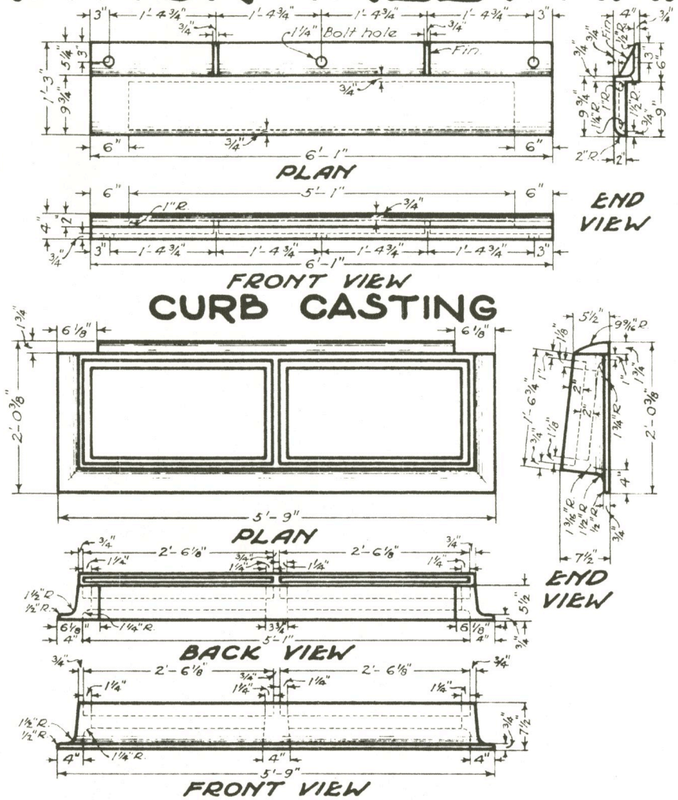

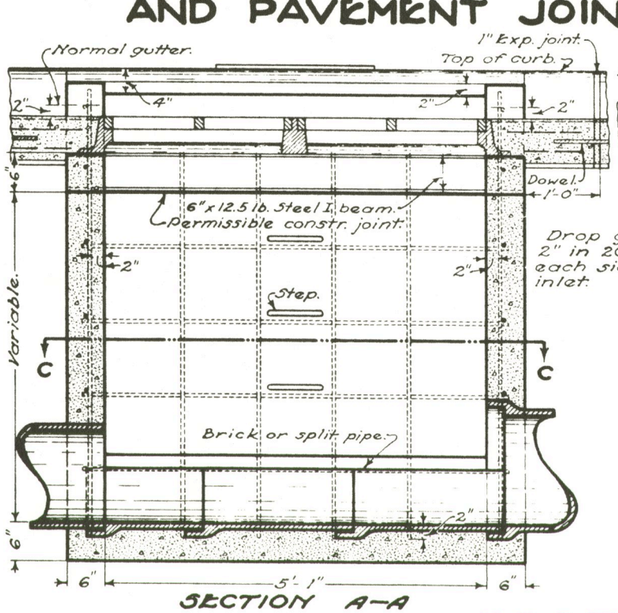

SECTION A-A

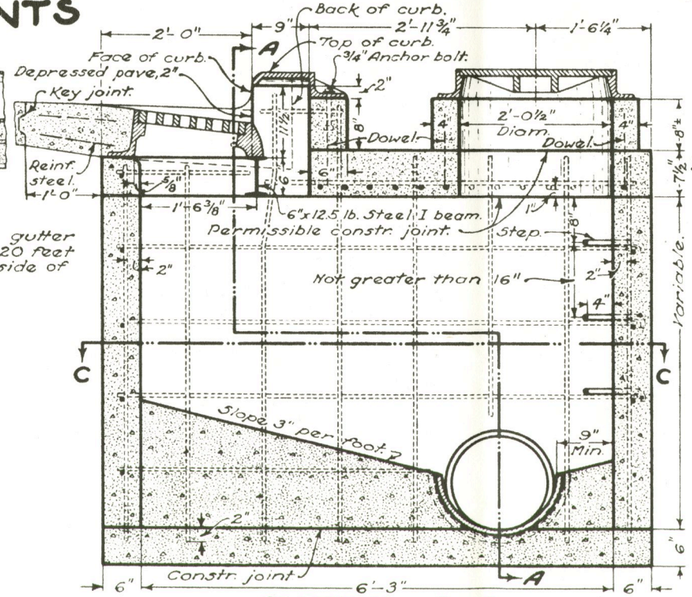

SECTION B-B

INLET-MANHOLE

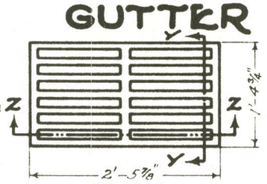

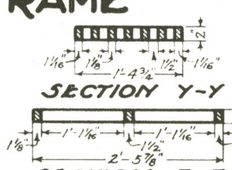

GUTTER GRATE

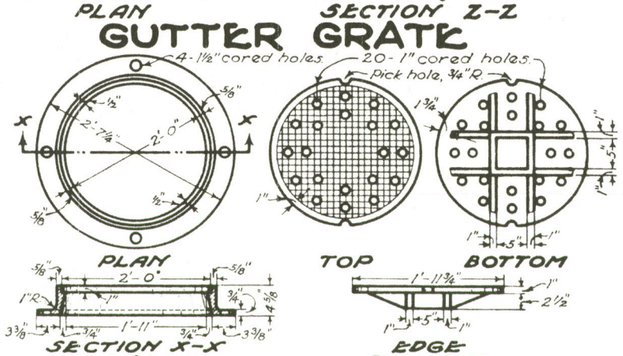

MANHOLE CASTINGS

NOTES

CASTINGS shall be of cast iron in accordance with Material Details. The designs shall be essentially the same and equally as strong as those shown hereon, and shall be given one coat of asphaltum paint as per specifications.

REINFORCING steel in walls shall be 1/2" round bars at 12" centers and vertical in each corner. Top to be reinforced as shown hereon.

CONCRETE shall be Class "C".

BRICK side walls, when used in place of reinforced concrete, shall be 8" in thickness, laid in Portland cement mortar, every sixth course to be a stretcher course.

BOTTOM of manhole shall be Class "C" concrete.

Channel sections in the manhole shall be constructed of split pipe or brick except curved sections which may be built by forming a channel in the concrete.

STEPS shall be of good quality wrought iron in accordance with Material Details, free from cracks and shall be given one coat of asphaltum paint as per specifications.

PAVEMENT:- The 8'-1" x 3'-6" portion blocked out of the pavement shall be placed after the casting has been set but shall be paid for as part of the pavement.

INLET CASTINGS

WEIGHTS, minimum :-

Curb casting	305 lbs.
Gutter frame	590 lbs.
Two grates	254 lbs.

BEARING AREAS of frame and grate shall be so fitted and finished as to provide a firm and even seat for all portions of the grate in the frame. No projections shall exist on bearing areas of either casting, and each grate shall seat in its frame without rocking. Frames and grates shall be fitted, matched and marked before delivery to the project.

MANHOLE CASTINGS

WEIGHT, minimum :-

Frame and cover	240 lbs.

SETTING OF CASTING:- The base of the frame shall be set in a full bed of Portland cement mortar, and so adjusted as to conform to the finished grade and slope of the adjacent surface.

NOTE:- When the portion of the manhole above the top slab is not placed integral with the slab it shall be tied to the slab with 1/2" x 12" deformed bars at 12" spacing.

BUREAU OF LOCATION AND DESIGN
OHIO DEPARTMENT OF HIGHWAYS

INLET-MANHOLE

STANDARD CONSTRUCTION DRAWING — I-8 M.H. No. 3-A

APPROVED K.L.R. CHIEF ENGINEER

DATE: 7-1-47, 1-2-51, 5-15-51, 5-1-52

STANDARD No. 3-A COMBINATION INLET-MANHOLE

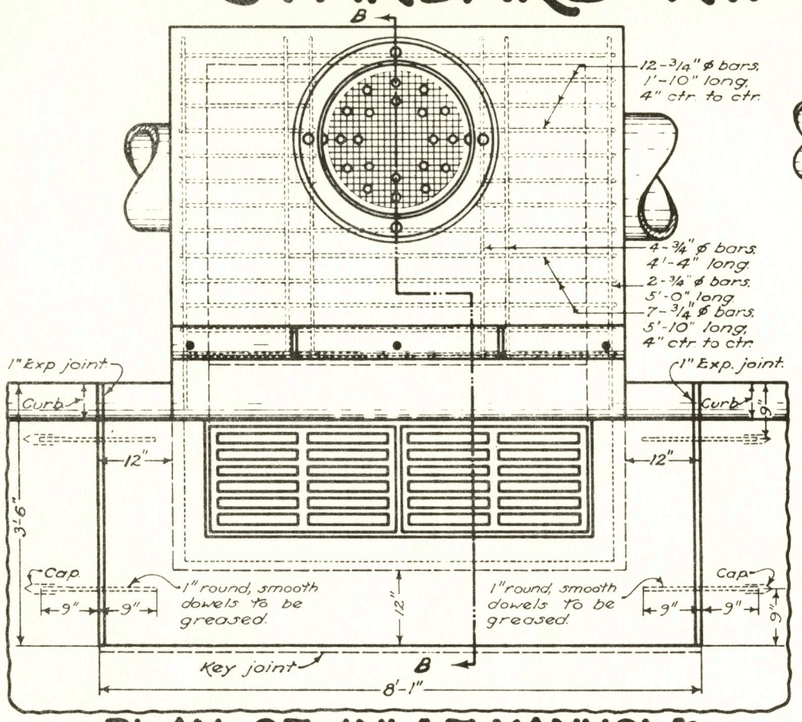

PLAN OF INLET-MANHOLE AND PAVEMENT JOINTS

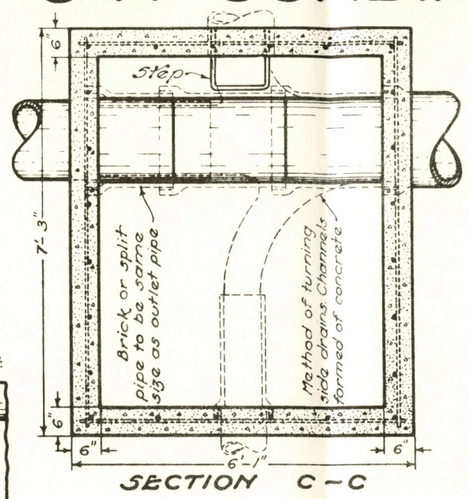

SECTION C-C

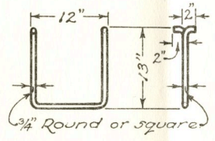

STEP DETAIL

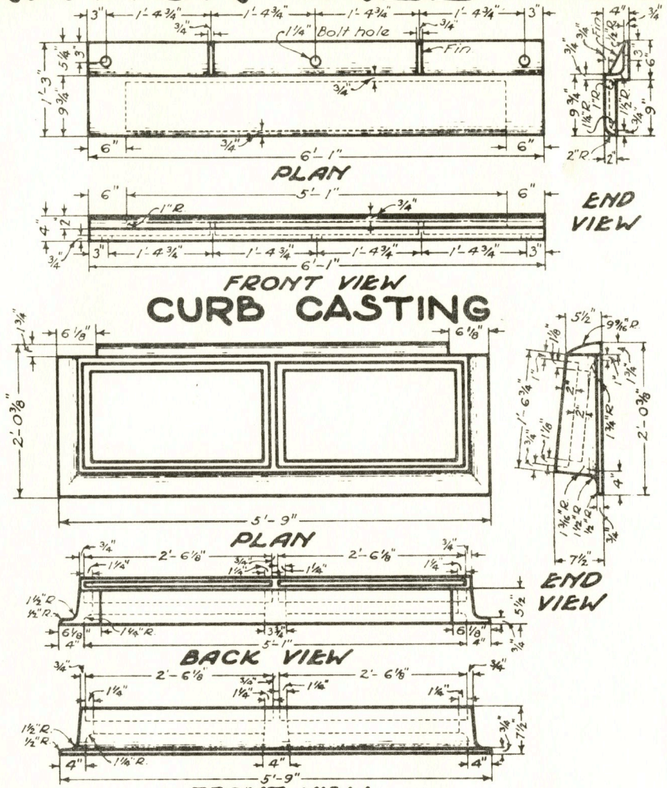

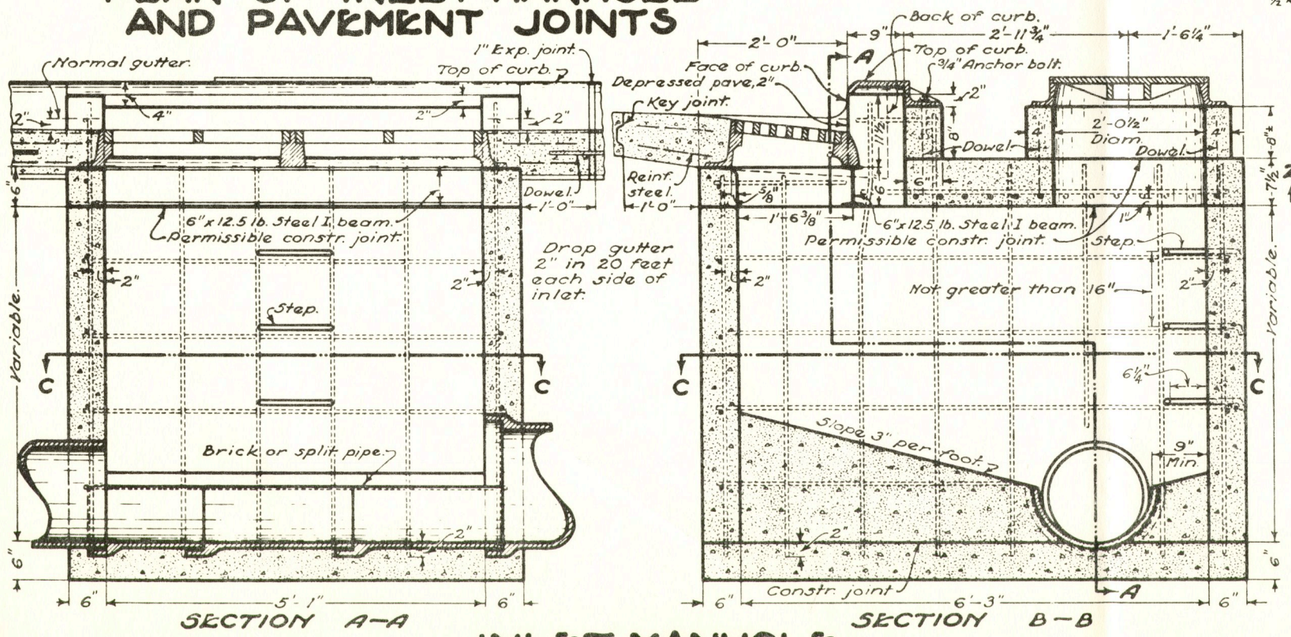

INLET-MANHOLE

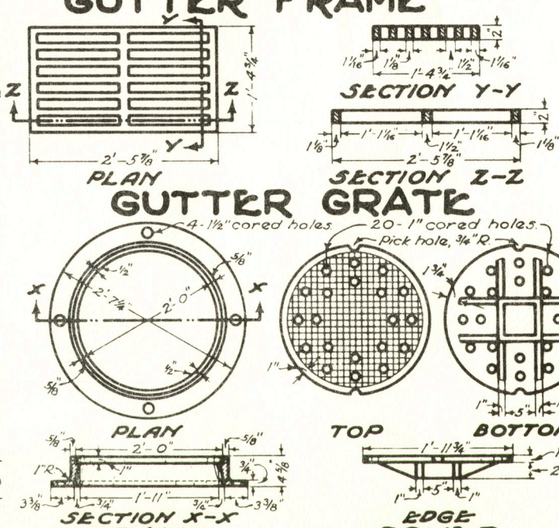

NOTES

CASTINGS shall meet the requirements of Item I-8. The design shall be essentially the same and equally as strong as those shown hereon and shall be given one coat of paint as per specifications.

REINFORCING steel in walls shall be 1/2" round bars at 12" centers and vertical in each corner. Top to be reinforced as shown hereon.

CONCRETE cast in place shall be Class "C".

BRICK OR CONCRETE BLOCK side walls, when used in place of reinforced concrete, shall be 8" in thickness, laid in Portland cement mortar, every sixth brick course to be a stretcher course.

BOTTOM of manhole shall be Class "C" concrete.

Channel sections in the manhole shall be constructed of split pipe or brick except curved sections which may be built by forming a channel in the concrete.

STEPS shall be of wrought iron or nodular iron meeting the requirements of Item I-8 and shall be given one coat of paint Sec. 1-9.18 or Sec. 1-9.19.

PAVEMENT:- The 8'-1" x 3'-6" portion blocked out of the pavement shall be placed after the casting has been set but shall be paid for as part of the pavement.

INLET CASTINGS minimum weights;

Curb casting	305 pounds
Gutter frame	590 pounds
Two grates	254 pounds

BEARING AREAS of frame and grate shall be so fitted and finished as to provide a firm and even seat for all portions of the grate in the frame. No projections shall exist on bearing areas of either casting, and each grate shall seat in its frame without rocking. Frames and grates shall be fitted, matched and marked before delivery to the project.

MANHOLE CASTINGS minimum weight;

Frame and cover	240 pounds.

SETTING OF CASTING:- The base of the frame shall be set in a full bed of Portland cement mortar and so adjusted as to conform to the finished grade and slope of the adjacent surface.

NOTE:- When the portion of the manhole above the top slab is not placed integral with the slab it shall be tied to the slab with 1/2" x 12" deformed bars at 12" spacing.

BUREAU OF LOCATION AND DESIGN
OHIO DEPARTMENT OF HIGHWAYS

INLET-MANHOLE

STANDARD CONSTRUCTION DRAWING — I-8 M.H. No. 3-A

DATE: 7-1-'47, 1-2-'51, 5-15-'51, 5-1-'52, 1-26-'59

APPROVED [signature] ENGR. L. & D.